Replacement for the
edition of 2014-05-05

Directive

Attachment of supporting fitting components for turn-only and tilt&turn fittings

with definitions for turn-only and tilt&turn fittings and their possible installation positions

Contents

1 Foreword 3
2 Area of application 3
3 Definitions 4
4 Long-term functionality – boundaries of the directive 7
5 Recommendations for attachment 8
6 Carrying out the tests 8
7 Requirements for the forces 14
8 Index of literature 21
9 Changes 22

Published by

Gütegemeinschaft Schlösser und Beschläge e.V.
Offerstrasse 12
42551 Velbert, Germany

Phone: +49 (0)2051 / 95 06 - 0
Fax: +49 (0)2051 / 95 06 - 25
https://www.guetegemeinschaft-schloss-beschlag.de/Pruefen-Zertifizieren/Richtlinien

Note

Technical details and recommendations in this directive are based on the state of knowledge at the time of going to press. The contents of the disclaimer on the above-mentioned website apply.

Contents in detail

1 Foreword ... 3
2 Area of application ... 3
3 Definitions ... 4
3.1. Tilt&turn fitting ... 4
3.1.1. Single-handed tilt&turn fitting ... 4
3.1.2. Two-handed tilt&turn fitting ... 4
3.2. Tilt-first fitting ... 4
3.2.1. Single-handed tilt&turn fitting ... 4
3.2.2. Two-handed tilt&turn fitting ... 4
3.3. Turning fitting ... 5
3.4. Installation position of fittings ... 5
3.4.1. Face-fixed fittings ... 5
3.4.2. Concealed fittings ... 5
3.4.3. Semi-concealed fittings ... 5
3.5. Installation position for bearings ... 6
3.5.1. Face-fixed bearing positions ... 6
3.5.2. Concealed bearing positions ... 6
3.5.3. Semi-concealed bearing positions ... 6
3.6. Sash weight ... 6
4 Long-term functionality – boundaries of the directive ... 7
4.1. Maximum sash weight ≤ 150 kg ... 7
4.1.1. Transmitting the long-term functionality of the fittings ... 7
4.1.2. Resistance to repeated opening and closing ... 7
4.2. Sash weight > 150 kg ... 7
5 Recommendations for attachment ... 8
6 Carrying out the tests ... 8
6.1. Sample preparation ... 9
6.2. Sample documentation ... 9
6.3. Testing of stay bearings ... 9
6.3.1. Testing of profile pieces ... 9
6.3.2. Testing of frame corners ... 10
6.3.3. Testing sequence ... 10
6.3.4. Assessment of the test results ... 12
6.4. Testing of corner bearings ... 12
6.4.1. Sample ... 13
6.4.2. Testing sequence ... 13
6.4.3. Assessment of the test results ... 13
7 Requirements for the forces ... 14
8 Index of literature ... 21
9 Changes ... 22

1 Foreword

In order to ensure the long-term functionality and thus also the operating safety of windows and French windows over their expected period of use, particular importance must be given to the attachment of safety-relevant fittings. This refers to the attachment of load-bearing components, stay bearings and corner bearings (a unit comprising corner bearing components on both the sash and the frame sides).

The **responsibility** for ensuring that fittings are sufficiently strong in accordance with the current technical regulations lies with the **fitting manufacturer**.

The **responsibility** for the correct attachment to the frame material (sashes and frames), and for ensuring the requirements listed here lies with the **manufacturer of windows and French windows**.

2 Area of application

The present directive defines the requirements for the attachment of supporting fitting components for turn-only and tilt&turn fittings as per the definitions in section 3.

This TBDK guideline, together with the latest version of the respective FAQs, must be applied by manufacturers of windows and French windows prior to the first use of turn-only and tilt&turn fittings in the intended window systems.

This directive sets out binding requirements in tables 1 and 2 (see Chapter 7) regarding forces ($F_{req.}$) for the fastening (screw connections, clamping, etc.) of stay bearings and corner bearings when installed, which must be verified by the manufacturer of windows and French windows through testing and ensured on their product for use with turn-only and tilt&turn fittings, depending on

- the maximum weight of the sash which he manufactures
- separate details from the hardware manufacturer combined with appropriate application diagrams.

Documentation in accordance with this guideline may be provided to manufacturers of windows and French windows, for example, by the system supplier (profile supplier, provider of documentation for CE marking of, for example, wooden window frame components, etc.), together with the relevant system descriptions and installation instructions.

To ensure , on an ongoing basis, that the documentation required under this directive is maintained in accordance with section 7, and, for sash weights > 150 kg, that the durability tests specified in section 4.2 have been successfully carried out, appropriate measures must be incorporated into the window and French window manufacturer’s internal production control system. Further information on internal production control can be found in the currently valid version of EN 14351-1, for example.

In accordance with this directive, the results of the tests are strictly to be used by the window and window door manufacturer during the production of his window elements:

- the technical documentation and particularly the corresponding application diagrams of the fitting manufacturer, as well as
- all guidelines and information from the system supplier.

The values in this directive apply to all materials from which the windows and window doors are manufactured, and their combinations. The requirements listed should be used correspondingly for comparable fittings for other types of openings.

3 Definitions

3.1. Tilt&turn fitting

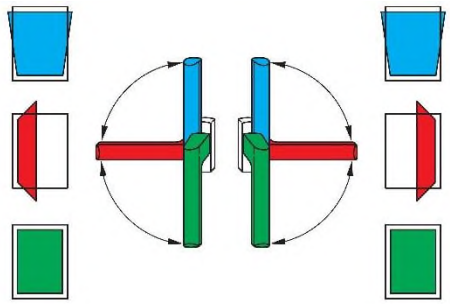

Tilt&turn fittings open and close windows and window doors. Tilt&turn fittings are used to bring the active sashes of windows and window doors out of the initial closed position into the turning position and then into the tilted position (stay end position) by activating the window handle (see example for active sashes connected at the right or left).

3.1.1. Single-handed tilt&turn fitting

The different positions of the fitting (closed, turning, and tilting positions) can be achieved by activating one window handle.

3.1.2. Two-handed tilt&turn fitting

The different positions of the fitting (closed, turning, and tilting positions) must be achieved by activating at least two window handles.

3.2. Tilt-first fitting

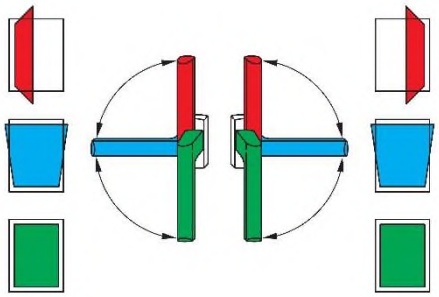

Tilt-first fittings open and close windows and window doors. Tilt-first fittings are used to bring the active sashes of windows and window doors out of the initial closed position and into the tilting position (stay end position) and then into the turning position by activating the window handle (see example for active sashes connected at right or left).

3.2.1. Single-handed tilt&turn fitting

The different positions of the fitting (closed, tilting, and turning positions) can be achieved by activating one window handle.

3.2.2. Two-handed tilt&turn fitting

The different positions of the fitting (closed, tilting, and turning positions) must be achieved by activating at least two window handles

3.3. Turning fitting

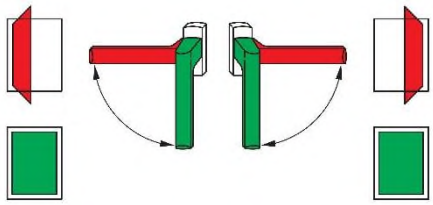

Turning fittings are used to be able to bring the active sashes of windows and window doors out of the initial closed position into the tilting position (stay end position) by activating the window handle. Turning fittings are usually manufactured as single-handed turning fittings (see example for active sashes connected at the right or left).

3.4. Installation position of fittings

In the following definitions, the term “fittings” is taken to include all functional elements such as fore-end tracks, closing components and/or drive rods whose purpose is to bring the fitting of the active sash into the closed or else into an open position (for example, into a tilting or turning position). The window handles are excepted here.

The installation location of the bearing positions (e.g. a stay angle hinge with a stay bearing and a corner bearing with sash hinge) are defined separately in section 3.5. Thus, in a description of a window design, the installation position of the fittings **and** the bearings must be specified separately; e.g.

- concealed fittings with surface-mounted bearings (stay bearings at the top and corner bearings at the bottom) ***or***
- concealed fittings with concealed bearings (stay bearings at the top and corner bearings at the bottom).

The window handle for activating the fitting of the active sash is usually applied in a visible position. For two-handed styles, this is also true for all window handles needed. Styles which deviate are to be separately specified in the description of a window style.

3.4.1. Face-fixed fittings

Fittings whose functional components, such as drive rods or closing components are visible even when the sash is closed. This includes face-fixed rod closures, for example.

3.4.2. Concealed fittings

Fittings whose functional components, such as fore-end tracks and/or drive rods are built into the rebate area between the sash and frame, and are invisible when the sash is closed.

The prerequisites for this are:

- opaque frame materials
- window constructions in which the rebate area between the sash and frame is covered from the outside and inside when the sash is closed.

3.4.3. Semi-concealed fittings

Fittings whose functional components, such as fore-end tracks, drive rods, and frame components are built into the rebate area between the sash and frame, and are only partially visible when the sash is closed.

The following prerequisites may contribute to this:

- partially transparent frame materials
- window constructions in which the rebate area between the sash and frame is not completely covered from the outside and/or inside when the sash is closed.

This can occur for example in a window profile design which is flush to the surface, in which a joint visible from all directions (shadow groove) between the sash and the frame allows visibility into the rebate area when the sash is closed.

3.5. Installation position for bearings

The installation position for the bearings is defined below, and various installation positions for the bearings may be used for one window style:

Example: A face-fixed bearing position in the lower corner area, and a concealed bearing position in the upper corner area.

3.5.1. Face-fixed bearing positions

Load-bearing components on fittings in which all frame-mounted bearing positions are visible when the sash is closed. Usually in this case the corresponding sash-mounted bearing components are at least partially visible.

3.5.2. Concealed bearing positions

Load-bearing components on fittings in which all frame-mounted bearing positions are not visible when the sash is closed.

The prerequisites for this are:

- opaque frame materials
- window constructions in which the rebate area between the sash and frame is covered from the outside and inside when the sash is closed.

3.5.3. Semi-concealed bearing positions

Fittings in which all frame-mounted bearing positions are only partially visible when the sash is closed.

The following prerequisites may contribute to this:

- partially transparent frame materials
- window constructions in which the rebate area between the sash and frame is not completely covered from the outside and/or inside when the sash is closed.
- fittings whose bearing positions are let into the sash in such a way that although they are covered when the surface of the closed sash is viewed at a right angle, when viewed from the side they are at least partially visible.

This can occur for example in a window profile design which is flush to the surface, in which a joint visible from all directions (shadow groove) between the sash and the frame allows visibility into the rebate area when the sash is closed.

3.6. Sash weight

In this directive, the term “sash weight” refers to the entire weight of a sash; it includes all the individual weights of the components used in a sash (sash frame including provided reinforcements, seals, glass strips, glazing or infill panels, hardware, glazing rebate blower etc.).

4 Long-term functionality – boundaries of the directive

4.1. Maximum sash weight ≤ 150 kg

4.1.1. Transmitting the long-term functionality of the fittings

Turn-only and tilt&turn fittings are tested and classified by the fitting manufacturer for their long-term functionality in accordance with the European standard EN 13126-8 (as specified in QM 328 or RAL-GZ 607/3). This concerns the reproducible testing of fittings. The results from these tests are interpreted for maximum sash weights ≤ 150 kg through compliance with the requirements of the corresponding fitting documentation - particularly the application diagrams - and the stipulations in the present directive and applied to windows and window doors.

4.1.2. Resistance to repeated opening and closing

The behaviour highlighted under 4.1.1 provides evidence of long-term functionality of a fitting used within a window or window door. However, it does not replace the test according to EN 1191 for the determination of the resistance of a window or window door during repeated opening and closing, as according to EN 1191, the following acceptance criteria are considered for which the behaviour highlighted under 4.1.1 cannot provide evidence:

- material failure of a part essential for the function of the window or window door, not only the fitting and its connection,
- durability of the infill and its connection,
- durabilty of the sealing systems,
- compliance of the operating forces of the complete window or window door according to the requirements of EN 13115.

Verification determining the resistance of the window or French windows to repeated opening and closing is to be provided by the manufacturer of the windows and French windows in accordance with EN 1191. The results may be classified as per EN 12400.

In addition, all guidelines and information from the system supplier are to be complied with, regardless of the respective frame material.

4.2. Sash weight > 150 kg

For sash weights > 150 kg, the results of durability tests on the fittings in accordance with EN 13126-8 (as specified in QM 328 or RAL-GZ 607/3) can no longer be applied to use in windows and French windows solely by means of the procedure set out in 4.1.1.

For sash weights > 150 kg, the manufacturer of the windows and window doors must provide evidence of the resistance of the window or window door during repeated opening and closing according to EN 1191. All guidelines and information from the system supplier are to be complied with, regardless of the respective frame material. The following points must be taken into account when carrying out the tests; these are also listed in QM 328 | Appendix 2 (combination test):

- The test format to be used for this test in relation to the corresponding application diagram is defined by the fitting manufacturer; this may differ from the formats specified in EN 13126-8
- The sample shall be fitted with the sealing system planned for the intended use.

- Testing with additional 1,000 N load in accordance with EN 13126-8:2017, section 7.6.6
- Soffit test in accordance with EN 13126-8:2017, Section 7.6.7
- Testing of fittings with turn limit (if present) in accordance with the verification requirements for window systems set out in the DOEB directive
- Rebate-hindrance test in accordance with EN 13126-8:2017, section 7.6.9
- Acceptance criteria in accordance with the current version of EN 13126-8 and EN 1191

The results may be classified as per EN 12400.

All requirements of the present directive are generally to be complied with, even for sash weights > 150 kg.

5 Recommendations for attachment

It is generally recommended to use high quality screws of sufficient size. The screws used must be matched to the appropriate window material. The requirements in the documentation from the manufacturer of the screws and of the frame must be implemented.

6 Carrying out the tests

To carry out tests, the samples must be fitted out according to the production method of the manufacturer of windows and door windows, or to the appropriate system description. The samples selected must be representative of the production method.

The worst situation for the fastening of the fitting components to the frame material (for plastic profiles, e.g. all screws, some of the screws, or no screws in the stiffening profile) must be taken into consideration.

- In order to keep the testing costs for its various production methods as economical as possible, the manufacturer of windows and doors can divide these production methods into technically comparable groups (clustering).
- When dividing these groups (clusters), it is generally advisable for the components used to be the same within each group:
  - in particular, the fittings used and fixing devices/screws (type, length, diameter, screw-in depth, number of force-transmitting threads, etc.)
  - and the design of the screw connection, for example with or without pre-drilling (diameter and depth)
  - or the alternative fastening, for example by means of clamping
- Within this type of group, for example, the respective designs of the plastic profiles or the intended type of wood and the profile (e.g. the profile depth) may vary.
- For each of the groups (clusters) formed in this way, representative samples can then be selected to demonstrate all the specific production methods within that group; this is usually the least favourable production method within such a group.

On the website of the publisher of this directive, a proposal for a form (test request) is available for download.

6.1. Sample preparation

- The samples are to be completely manufactured by the window manufacturer/system supplier in compliance with all details of the intended production method. For this, a detailed description of the sample and its manufacture with all relevant details is required, so that it can be extensively documented in the test report.
- At least 5 identical samples are required for testing. If necessary, two further samples must be produced in order to determine the tensile/compressive force that can be achieved with the sample.
- The requirements regarding tensile and compressive forces are set out in tables 1 and 2 in Chapter 7, depending on the intended maximum mass of the sash (maximum sash weight). If according to ift guideline "Creation of application diagrams for turn-only and tilt&turn fittings", alternative force requirements relating to the appropriate application diagrams must be complied with, these must be specified by the hardware manufacturer.
- The samples must be stored before the test for at least 8 hours at a temperature of 15 to 30 °C.

6.2. Sample documentation

The main components of the sample documentation are:

- Description of the sash and frame (article numbers, profile geometry, material, type, and location of the reinforcement, use of additional insertion parts or other screw-fastening aids, etc)
- fitting components used (manufacturer, type)
- maximum sash weight that may be fabricated by the window manufacturer, or alternative details from the fitting manufacturer on the forces combined with the appropriate application diagrams
- Fixing devices/screws used (type, length, diameter, penetration depth, number of force-bearing threaded items, etc)
- type of threaded connection, for example with or without pre-drilling (diameter and depth) or of the alternative attachment, for example by clamping
- if necessary, description of further production details (for example torque or penetration stop during tightening etc)

6.3. Testing of stay bearings

6.3.1. Testing of profile pieces

- If the screw positions on the vertical frame profile are restricted because of design, a profile piece (scantling section) of approx. 300 mm is sufficient for the execution of the test. The outer screw connections must be made at least 50 mm away from the cut edges of the profile piece (the scantling section).
- The stay bearing is to be fitted centrally in the intended installation position on the profile piece.
- For the application of the tensile force, the sample is inserted into a support, e.g. as shown in figure 3. Here, the inner side of the profile piece is laid flat against the upper surface of the support bracket.

  Comment: for systems which open outwards, the outer side of the profile piece is laid flat against the upper surface of the support bracket.

- The ends of the cavity in the support bracket must be positioned at least 10 mm from the ends of the stay bearing.
  - To test the fastening of bearing components at the joints between the mullions and transoms on the window frame, it is usually necessary to use samples in accordance with 6.3.2.

6.3.2. Testing of frame corners

- If, for design purposes, the screw positions are planned on the vertical and horizontal profile piece (scantling section),
  - e.g. for bearings that are covered, ***or***
  - this is carried out in the area of a frame corner connection (for example in the case of wooden windows) ***or***
  - this is carried out at the connection points of mullions and transoms on the frame (especially in the case of plastic profiles),
  - a frame corner must be used for the test.
- The frame corner must be selected in such a way that the stay bearing can be screwed on completely and the areas around the joints are taken into account.

  The cut edges of the frame corners must be at least 50 mm away from the outer bolted connections of the fitted stay bearing.
- For the application of the tensile force, the sample is inserted into a corresponding support, e.g. as shown in figure 4. Here, the inner side of the frame corner is laid flat against the upper surfaces of the support bracket.

  Comment: for systems which open outwards, the outer side of the frame corner is laid flat against the upper surfaces of the support bracket.
- The ends of the cavity in the support bracket must be positioned at least 10 mm from the ends of the stay bearing.

6.3.3. Testing sequence

- Together with the stay bearings to be tested, the corresponding stay arm is always used for the transmission of force (with the respective components for coupling the stay arm to the stay bearing).
  - Only original components and no dummies manufactured for testing are to be used. This applies to the entire TBDK generally.
  - The force transmission point is generally at the connection between the stay arm and the supporting arm; a dowel pin should ideally be used, and this is inserted through the punched hole at this connection point; the forces are also transmitted via this point in practice
  - Other words for supporting arm include control arm, support brace, stay-arm hinge, control lug, short stay arm and securing arm

- If the gripping collet is used instead of the dowel pin, the gripping collet must grip at the connection point (the stay arm is gripped via its flat surface)

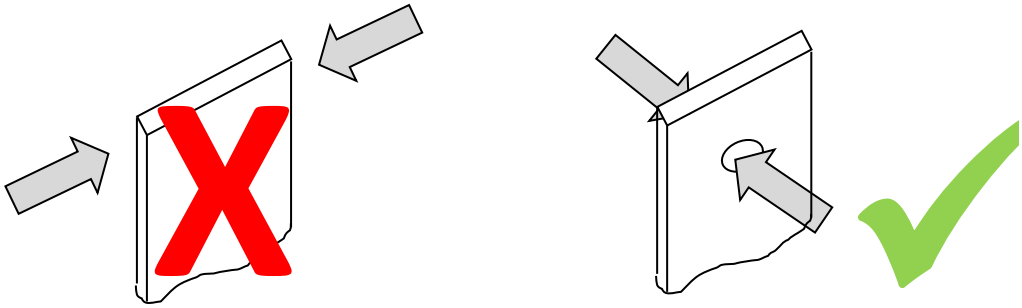

- If different stay arm sizes with the same design features are available for a maximum sash weight, the size of the stay arm to be tested can be chosen at will.

- Suitable measures are to be taken to prevent the deformation of the stay arm or distortion of the stay angle hinge, in order that the force transmission point does not change.
  - no roller to support the stay arm (to prevent deflection when subjected to a load)
  - The first consideration is to place only the adjustor piece in the intended position for DIN left or DIN right installation in case it twists out before the test force can be attained
  - Other reinforcements (e.g. claws, cuffs etc.) that have a positive effect on force transmission and further increase the values for connecting the component are not permissible
  - If the test forces are greater, e.g. for sash weights greater than 200 kg, damage may be done to the stay arm before the test forces are attained (e.g. cracks or fractures)
  - In this case, additional supportive measures are required to be able to apply the intended test forces
  - These measures must then be selected to ensure that the type of force transmission does not change given the non-reinforced component.
- If necessary, a pre-test on 2 samples is to be carried out in order to determine the tensile force which can be achieved with the sample.
- The test itself is carried out on 5 identical test samples.
- The samples are loaded at a feed rate of 10 mm/min until the necessary tensile force is achieved. This tensile force is maintained for a period of 5 s. After this, the load is relieved.

6.3.4. Assessment of the test results

The previously decided tensile force may not be exceeded on any of the 5 test samples. After relieving the load, the following must be true:

- The stay bearing may not have lifted more than 2 mm at any screw location.

  For face-fixed bearing positions, the unformed inner side (on inward opening systems) or outer side (on outward opening systems) of the profile piece/frame corner is to be used as a reference plane.

  For the vertical deformation/displacement of the frame-mounted rebate surface on the concealed or semi-concealed bearing positions, the unformed frame-mounted rebate surface of the profile piece/frame corner is to be used as a reference plane. See the examples in figure 6, section A-A 1 and A-A 2.

  For the vertical deformation/displacement of the inner/outer side of concealed or semi-concealed bearing positions, the unformed inner side (on inward opening systems) or outer side (on outward opening systems of the profile piece/frame corner is to be used as a reference plane for frame components. See the examples in figure 6, section A-A 1.

- No screw head may be pulled out more than 2 mm from the profile piece or from the frame corner.

  For face-fixed bearing positions, the unformed inner side (on inward opening systems) or outer side (on outward opening systems) of the profile piece/frame corner is to be used.

  For concealed or semi-concealed bearing positions, the unformed frame-mounted rebate surface is to be used for this. See the examples in figure 6, section A-A 3.

- No screws may be scored or torn off.
- No heads of the screws or fixing devices may be pulled into the screw hole of the stay bearing. See the examples in figure 6, section A-A 4.
- There may be no cracks or damage on any of the tested stay bearings. The installing and positioning aids are excepted here.
- No cracks or other damage may have occurred on any of the profile pieces or the frame corners. Deformations, e.g. conical swellings are permitted, as long as all other failure criteria have been positively evaluated.
- In general, alternative fixing devices (rivets, clamping systems etc.) are to be considered for all points mentioned above.

6.4. Testing of corner bearings

The values for the tensile forces given in table 1 are based on the stay used, in interaction with the corresponding stay bearing. A separate calculation showing the compressive forces for the corner bearing in accordance with table 2 is not strictly necessary,

- provided that the attachment system for the corner bearing is technically comparable to that of the stay bearing, <u>and</u>
- the maximum sash weight is ≤ 150 kg, <u>and</u>
- it concerns face-fixed fittings.

If one of the previously listed points is not the case, the compressive forces listed in table 2 for the corner bearing (sash- and frame-mounted component) must be specifically tested.

6.4.1. Sample

- The sample of frame and sash frame corners is intended for a leg length frame of approx. 300 mm each. The frame corner must be selected so that the corner bearing (and any load transfer provided) can be completely screwed on and the areas of connection points are taken into account.
- If a so-called load transfer also has to be installed (e.g. a pressure bar above the corresponding support between the frame and sash frame), the leg length is to be made to the relevant length.
- A sufficiently rigid panel (for example, made of a wood-based composite material) must be fitted in the corner of the wing. The plate is placed directly onto the glass rebate area; the use of glazing blocks is avoided. The fixing of the plate takes place with glazing fixtures and/or with screws, which are attached through the frame corners into the plate.

6.4.2. Testing sequence

- For the application of the compressive force into a support e.g. as shown in figure 5; if necessary, the frame can be fixed into the support with clamps. The sash corner is brought to the 90° open position.
- The support is aligned in the test rig (preferably a universal test rig for pull- and push testing) so that the transmission of force takes place below 30° (for covered and semi-concealed corner bearings with regard to the lower sash corner, for face-fixed corner bearings with regard to the pivoting point). While aligning the samples, take care that the sash frame is parallel to the frame and there is no point of contact. The sash plate is fixed to the sample holder of the test rig (slide) at this point. The connection is to be carried out so that the sash corner is guided by the test rig during the test.
- If necessary, the support is fixed to the table of the test rig.
- If necessary, a pre-test on 2 samples is carried out in order to determine the compressive force which can be achieved with the sample configuration. The test itself is carried out on 5 identical test samples.
- The samples are loaded at a feed rate of 10 mm/min until the necessary compressive force is achieved. This compressive force is maintained for a period of 5 s. After this, the load is relieved.

6.4.3. Assessment of the test results

The previously decided compressive force may not be exceeded on any of the 5 test samples. After relieving the load, the following must be true:

- The corner bearing must not have lifted more than 2 mm or have been pressed into the frame material.

  For frame components, the unformed inner side (on inward opening systems) or outer side (on outward opening systems) of the profile piece/frame corner is to be used as a reference plane.

  For the vertical deformation/displacement of the frame-mounted rebate surface on the concealed or semi-concealed bearing positions, the unformed frame-mounted rebate surface of the profile piece/frame corner is to be used as a reference plane for the component on the window frame side. See the examples in figure 6, section A-A 1, A-A 2 and A-A 4.

  For the vertical deformation/displacement of the inner/outer side of concealed or semi-concealed bearing positions, the unformed inner side (on inward opening systems) or outer side (on outward opening systems) of the profile piece/frame corner is to be used as a reference plane for frame components. See the examples in figure 6, section A-A 1.

- No screw head may be pulled out more than 2 mm from the sample, neither from the frame corner nor the sash frame corner.

  For frame components, the unformed inner side (on inward opening systems) or outer side (on outward opening systems) of the profile piece/frame corner is to be used as a reference plane.

  For concealed or semi-concealed bearing positions, the unformed frame-mounted rebate surface is to be used for frame components. See the examples in figure 6, section A-A 3.
- No screws may be stripped or broken at the corner components, neither from the sash frame nor the frame components.
- No heads of the screws or fixing devices may be pulled into the screw hole of the corner components, neither from the sash frame nor the frame components. See the examples in figure 6, section A-A 4.
- There may not be cracks or damage on any of the tested corner components. The installing and positioning aids are excepted here.
- There may not be cracks or damage on any of the samples. Deformations, e.g. conical swellings are permitted, as long as all other failure criteria have been positively evaluated.
- In general, alternative fixing devices (rivets, clamping systems etc.) are to be considered for all points mentioned above.

7 Requirements for the forces

The forces ($F_{req.}$) shown in tables 1 and 2 are calculated for the test variables according to EN 13126-8 (using only the most unfavourable window format in each case). The forces specified therein ($F_{req.}$) relate to long-term functionality in accordance with EN 13126-8 (as specified in QM 328 and RAL-GZ 607/3).

Alternative requirements for the forces in connection with the appropriate application diagrams must be determined and stated by the hardware manufacturer as per ift guideline “Creation of application diagrams for turn-only and tilt&turn fittings”.

Examples of face-fixed bearing positions are shown in figures 1 and 2. However, they also apply accordingly for the “semi-concealed” and “concealed” installation positions corresponding to the definitions in section 3.

The manufacturer of the windows and window doors must test the specified forces ($F_{req.}$) and guarantee its product. The forces for the attachment of supporting fitting components of turn-only and tilt&turn fittings can also be applied to additional loads in accordance with picture A.1 from EN 14608 (Window - Determination of resistance to racking).

Evidence according to EN 14608 (or EN 14609) cannot be derived from this. This must be carried out on the complete window or window door system by the window and window door manufacturer.

For further background information, “Creation of application diagrams for turn-only and tilt&turn fittings” is referenced in section 3.2 in the ift guideline.

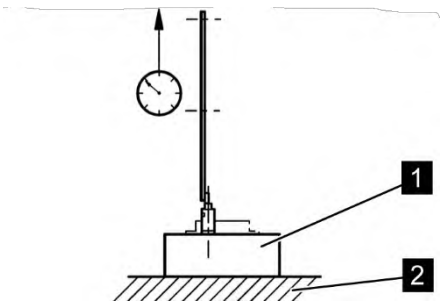

Fig. 1: Testing arrangement for the stay bearing

Key

1 Frame material – attachment of the bearing position according to the production method of the window manufacturer

2 Clamping plate - preferably made from steel

Application of the load (tensile force $F_{req.}$): 10 mm/min

Tensile force $F_{req.}$ according to table 1

Table 1 **Testing with static load for hinges with a stay bearing**
Load application at 90°, as shown in fig. 1

Max. sash weight m_F [kg]	**Tensile force $F_{req.}$ [N]**	**Calculation of $F_{req.}$** (Table values partially rounded off) Also for lower and higher sash weights and for intermediate values, which are not listed in the table
50	1400	Fittings for maximum permitted sash weights (m_F) ≤ 130 kg $F_{erf.} = 5 \times \frac{m_F \times 10 \times 1300}{1200 \times 2}$
60	1650	
70	1900	
80	2200	
90	2450	
100	2710	
110	3000	
120	3250	
130	3525	
140	3900	Fittings for maximum permitted sash weights (m_F) > 130 kg $F_{erf.} = 5 \times \frac{m_F \times 10 \times 1550}{1400 \times 2}$
150	4200	
160	4450	
170	4710	
180	5000	m_F > 150 kg Verification in accordance with EN 1191 is required to ensure the long-term functionality of the windows (see 4.2)
190	5300	
200	5550	
At the start of the tensile test, the point of application of the force must be exactly above the pivot point of the stay bearing – see, in particular, figure 3 (top right).		

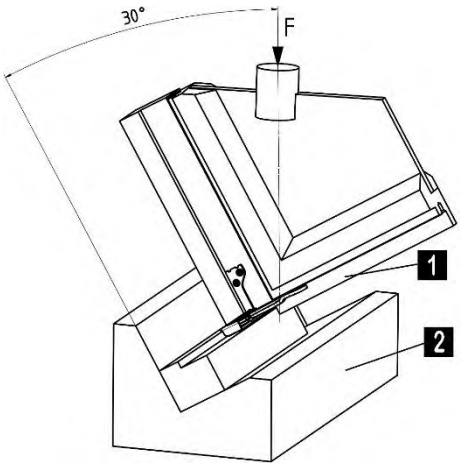

Fig. 2: Testing arrangement for the corner bearing

Key

1 Corner area and installation of the corner bearing according to the production method of the window manufacturer

2 Clamping plate – preferably made from steel or aluminium

Application of the load (compressive force $F_{req.}$): 10 mm/min

Compressive force $F_{req.}$ according to table 2

Table 2 **Testing with static load for corner components**
Load application at an angle of less than 30°, as shown in fig. 2

Max. sash weight m_F [kg]	**Compressive force $F_{req.}$** [N]	**Calculation of $F_{req.}$** (Table values partially rounded off) Also for lower and higher sash weights and for intermediate values, which are not listed in the table
50	1450	Fittings for maximum permitted sash weights (m_F) ≤ 130 kg $F_{erf.} = 2{,}5 \times \sqrt{\left(\frac{m_F \times 10 \times 1300}{1200 \times 2}\right)^2 + (m_F \times 10)^2}$
60	1740	
70	2025	
80	2310	
90	2600	
100	2890	
110	3180	
120	3470	
130	3760	
140	4050	Fittings for maximum permitted sash weights (m_F) > 130 kg $F_{erf.} = 2{,}5 \times \sqrt{\left(\frac{m_F \times 10 \times 1550}{1400 \times 2}\right)^2 + (m_F \times 10)^2}$
150	4340	
160	4620	
170	4910	
180	5200	m_F > 150 kg Verification in accordance with EN 1191 is required to ensure the long-term functionality of the windows (see 4.2)
190	5490	
200	5780	

Figure 3: *Example of a stay bearing on a 300 mm long profile piece*

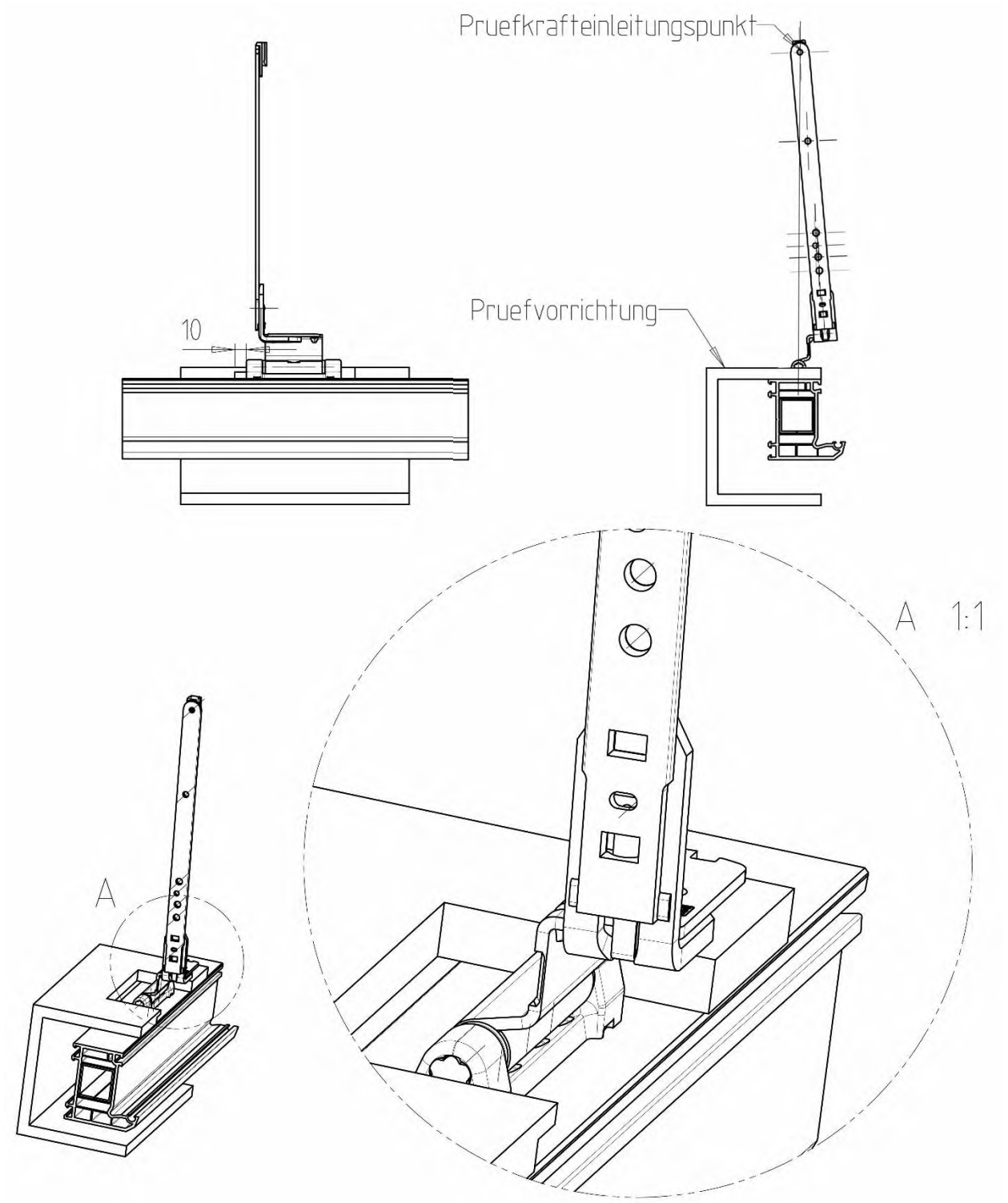

Comment:

At the start of the tensile test, the point of application of the force must be exactly above the pivot point of the stay bearing – see, in particular, figure 3 (top right). When subjected to tensile stress, this alignment may change slightly; this is often unavoidable and is therefore permissible.

Figure 4: *Example of a stay bearing on a frame corner*

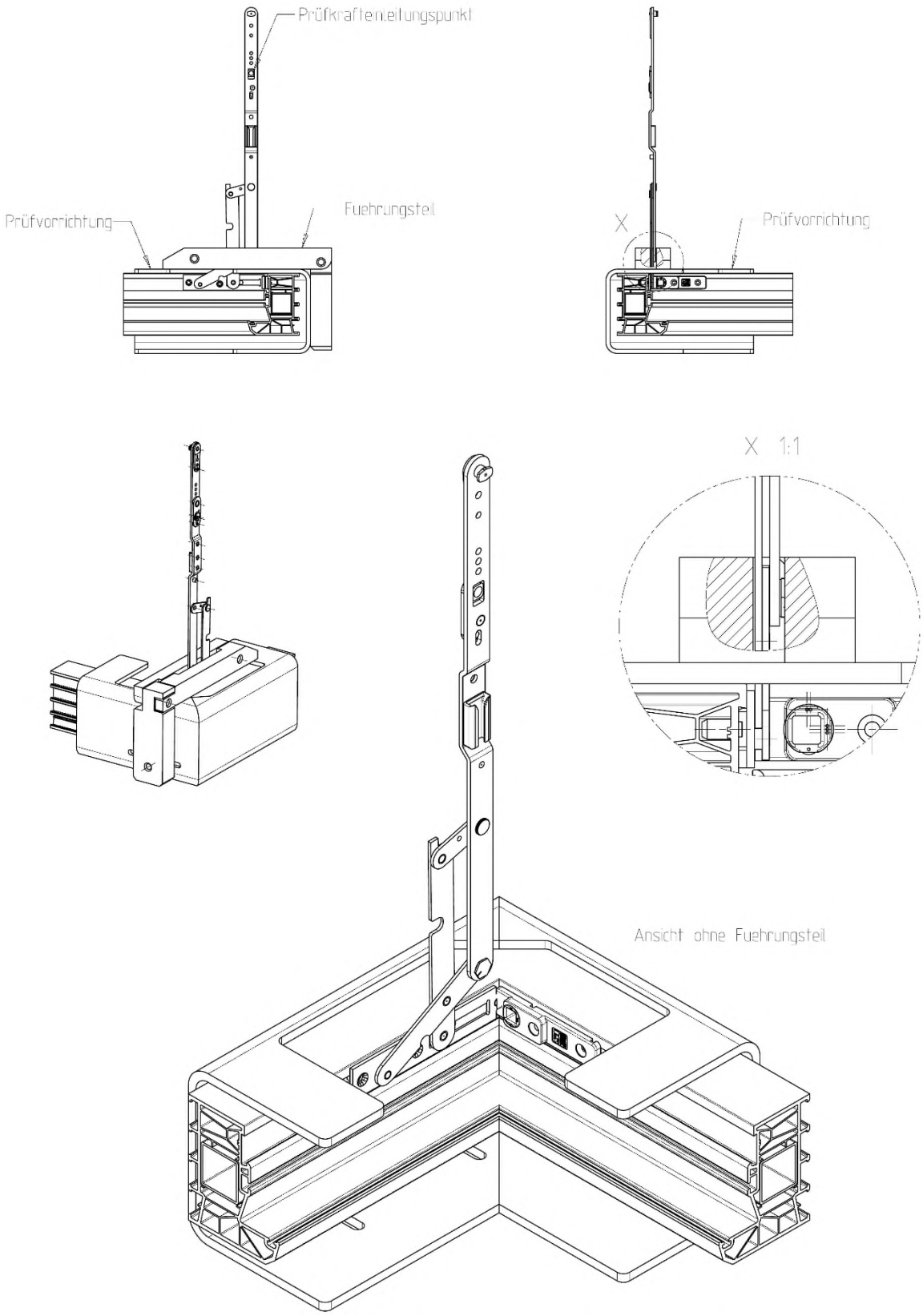

Figure 5: *Example of a corner bearing test*

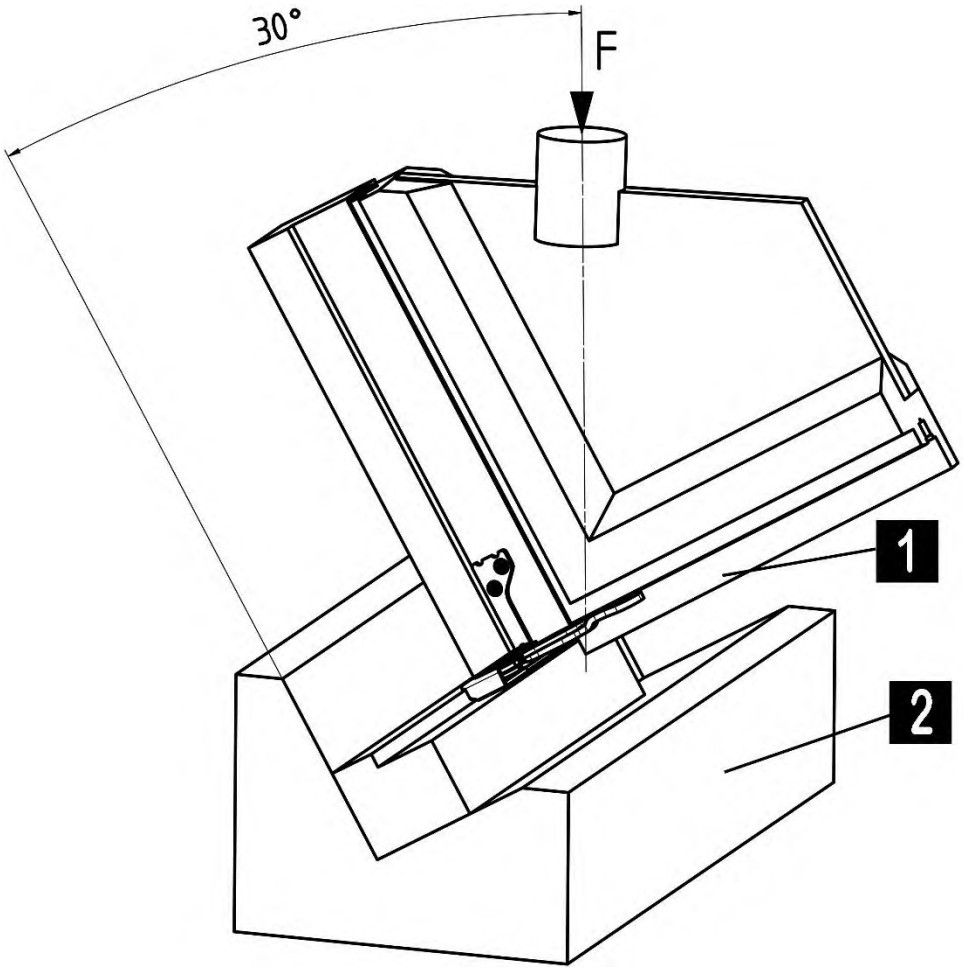

1 Corner area and installation of the corner bearing according to the production method of the window manufacturer

2 Clamping plate – preferably made from steel or aluminium

Comment:

A concealed corner bearing is represented. The same or test setup is to be used for semi-concealed and face-fixed corner bearings

Figure 6: *Corner bearing - assessment of the test results*

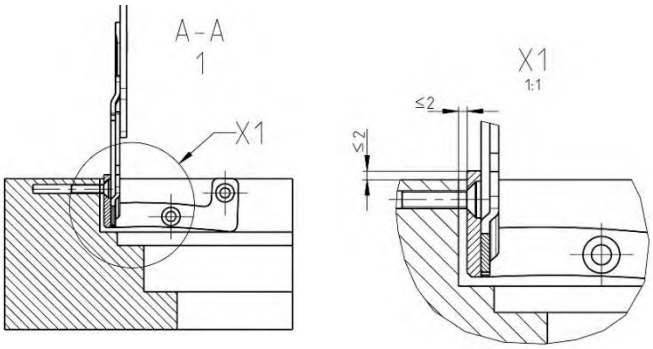

Failure criteria *screw loosened, bearing lifted and/or displaced*

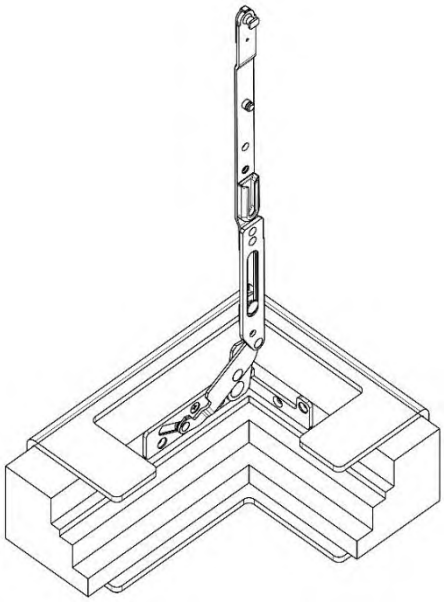

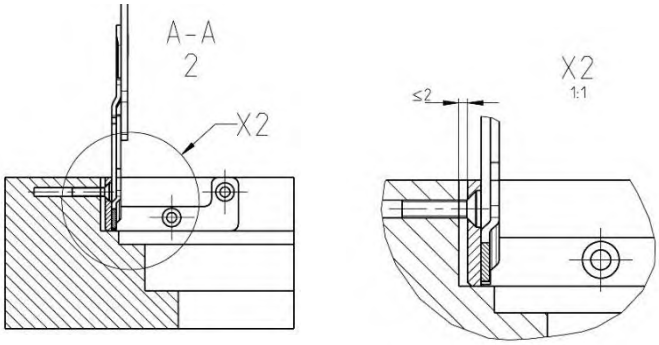

Failure criteria *screw loosened, bearing displaced*

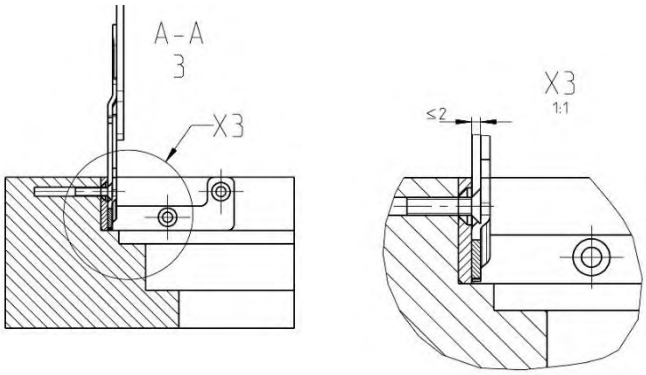

Failure criteria *Screw head pulled out*

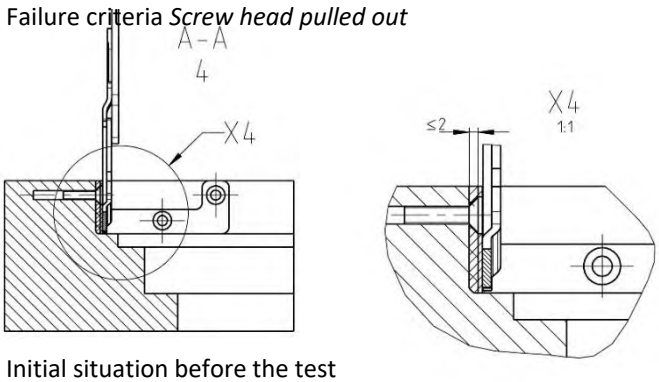

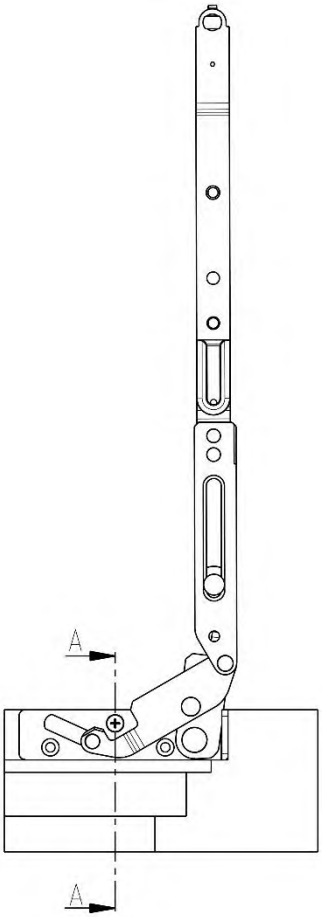

Initial situation before the test

Comment:

Examples of deformations/displacements on concealed stay bearings. To be used correspondingly for semi-concealed stay bearings as well as concealed or semi-concealed corner bearings.

8 Index of literature

RAL-GZ 607/3	*Property and test requirements for turn-only and tilt&turn fittings*
ift Guide	*BE-01/1 Creation of application diagrams for turn-only and tilt&turn fittings*
ift directive	*FE-13/1 qualification of plastic window profiles*
QM 328	*ift certification programme for turn-only and tilt&turn fittings*
HO.06-1	*Fact sheet of VFF (Verband Fenster + Fassade Frankfurt - Association of Window and Façade Manufacturers of Frankfurt)* *"Wood types for window construction – Part 1: Properties, table of wood types"*
HO.06-2/A1	*Fact sheet of VFF (Verband Fenster + Fassade Frankfurt - Association of Window and Façade Manufacturers of Frankfurt)* *Wood types for window construction - Part 2: Wood types for use in protected wood constructions*
HO.06-3	*Fact sheet of VFF (Verband Fenster + Fassade Frankfurt - Association of Window and Façade Manufacturers of Frankfurt)* *Wood types for window construction - Part 3: Laminated wooden scantling of various wood types and wood production*
HO.06-4	*Fact sheet of VFF (Verband Fenster + Fassade Frankfurt - Association of Window and Façade Manufacturers of Frankfurt)* *Wood types for window construction - Part 4: Modified woods*
EN 1191	*Windows and doors - Resistance to repeated opening and closing - test method*
EN 12400	*Windows and pedestrian doors - Mechanical durability - Requirements and classification*
EN 12608	*Plasticiser-free polyvinylchloride (PVC-U) profiles for the fabrication of windows and doors - Classification, requirements and test methods*
EN 13115	*Windows - Classification of mechanical properties - Racking, torsion and operating forces*
EN 14608	*Windows – Determination of resistance to racking*
EN 14609	*Windows - Determination of the resistance to static torsion*
EN 13126-8	*Building hardware - Requirements and test methods for windows and doors height windows - Part 8: Tilt & Turn, Tilt-First and Turn-Only hardware*
EN 14351-1	*Windows and doors - Product standard, performance characteristics - Part 1: Windows and external pedestrian doorsets without resistance to fire and/or smoke leakage characteristics*
Installation guide	*Guide for the planning and execution of the installation of windows and house doors of the RAL Quality Alliance for Windows and House Doors (Frankfurt)*
VHBH	*Directive "Window and balcony door hardware – Guidelines/advice on the product and on liability" of the Quality Assurance Association: Locks and Hardware*
VHBE	*Directive "Window and balcony door hardware – Guidelines and Advice for End Users" of the Quality Assurance Association: Locks and Hardware*

9 Changes

The following changes have been incorporated into this edition compared with the version dated 20140-05-05:

- Text in Chapter 1 | 2nd paragraph amended – note: “in accordance with the current technical regulations”
- Text in Chapter 2 | 2nd section amended – including the addition of a reference to the latest version of the FAQs
- Text adapted in Chapter 2 | Section 3 - Reference to fastening (screw connection, clamping, etc.) added
- Text in Chapter 2 | 4th section amended – brackets added (profile provider, supplier...)
- Text in Chapter 2 | Section 4 amended
- Taken from the minutes book
  - List in Chapter 3.4 | under the 2nd section
  - “Load-bearing component on” at the beginning of Chapter 2.5.2
  - List with four details in Chapter 6 | under the 2nd section
  - Additional bullet point (2nd level) in Chapter 6.3.1| below the last bullet point
  - Additions under bullet points 1 and 2 in Chapter 6.3.2
  - More extensive amendments in Chapter 6.3.3
    = Several bullet points (2nd level) below the 1st bullet point
    = Graphics inserted
    = Several bullet points (2nd level) below the previous 2nd bullet point
  - Additional text in Chapter 6.4.1 | under the 1st bullet point
- Chapter 4.2 | after 2nd section – List of seven details for the required check included in the text
- Text amendments and structural improvements in section 6.3.2 – additional text relating to the 1st bullet point as it currently stands
- Footnote inserted at the end of table 1
- Graph in the top right-hand corner of figure 3 corrected (90° line) – note added below the figure
- The captions for figures 3–5 have been amended to include “Example of a …”
- Additions to the explanatory notes (text) in Figure 6
- Chapter 9 | Changes introduced

This directive was developed in cooperation with:

Fachverband Schloss- und Beschlagindustrie e.V.
(German Lock and Hardware Industry Trade Association), Velbert

Offerstrasse 12

D-42551 Velbert, Germany

RAL-Gütegemeinschaft Kunststoff-Fensterprofilsysteme e.V.
(the RAL Quality Alliance for Plastic Window Profiles)

Am Hofgarten 1-2

D-53113 Bonn, Germany

Prüfinstitut Schlösser und Beschläge
(Testing Institute for Locks and Fittings), Velbert

Wallstrasse 41

42551 Velbert, Germany

Institut für Fenstertechnik e.V.
(Institute for Window Technology)

Theodor-Gietl-Strasse 7-9

83026 Rosenheim, Germany

Technischer Ausschuss des VFF
(Technical committee of the VFF)

Verband Fenster und Fassade
(German association of window and facade manufacturers, Frankfurt)

Walter-Kolb-Straße 1–7

60594 Frankfurt am Main, Germany